TYPES OF INSULATING RODS FOR SHORT-CIRCUITING SETS EHV

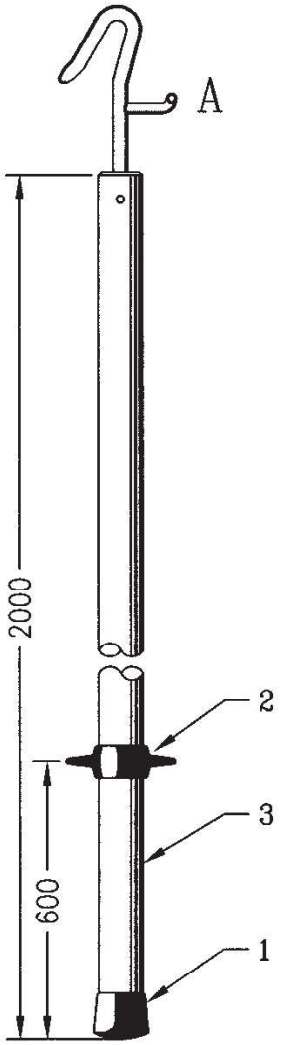

ENDING A -
stand-by connected steel hook for operating of conductor clamp 152110-0100

ENDING C -
shell cup for operating of clamps
154110-0100
156110-0100

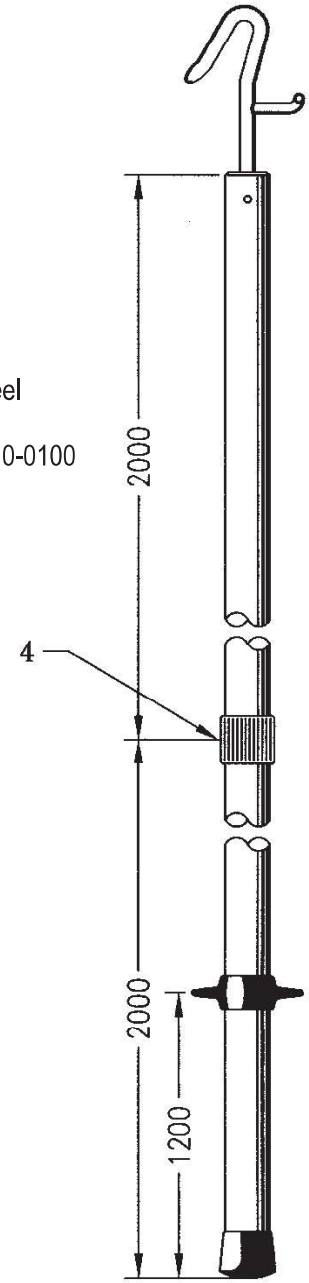

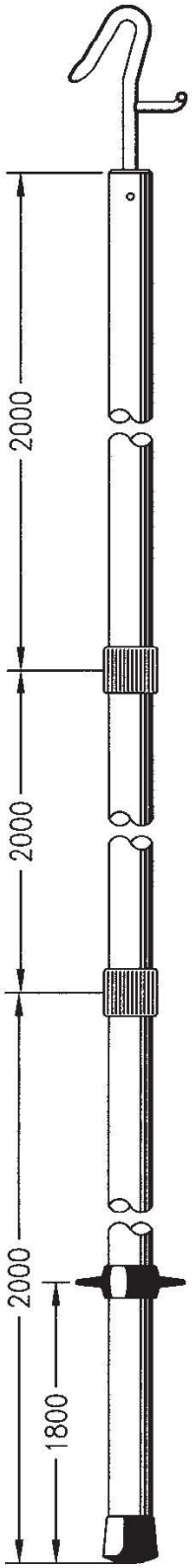

1) Rubber plug
2) Rubber protecting collar Ø100mm
3) Glass-fiber tube Ø40mm
   color: yellow
4) Insulating rod's connection with cap nut

Type	Ending	Design	Max. voltage [kV]	Tot. length [mm]	Weight [kg]
152110-500	A	one-piece	123	2000	1,4
152220-500		two-piece	245	4000	3,1
152400-500		three-piece	420	6000	4,8
154110-500	C	one-piece	123	2000	1,4
154220-500		two-piece	245	4000	3,1
154400-500		three-piece	420	6000	4,8